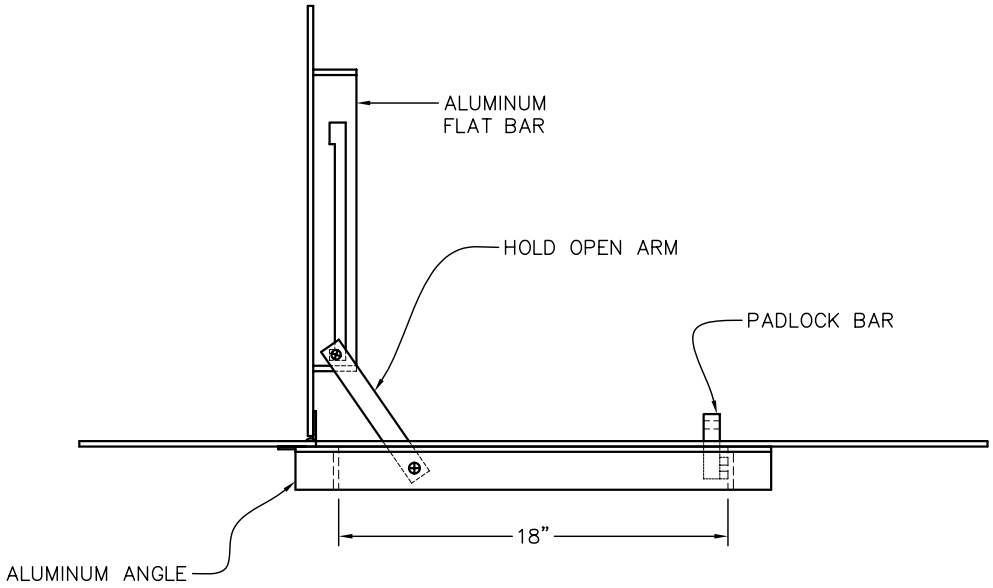

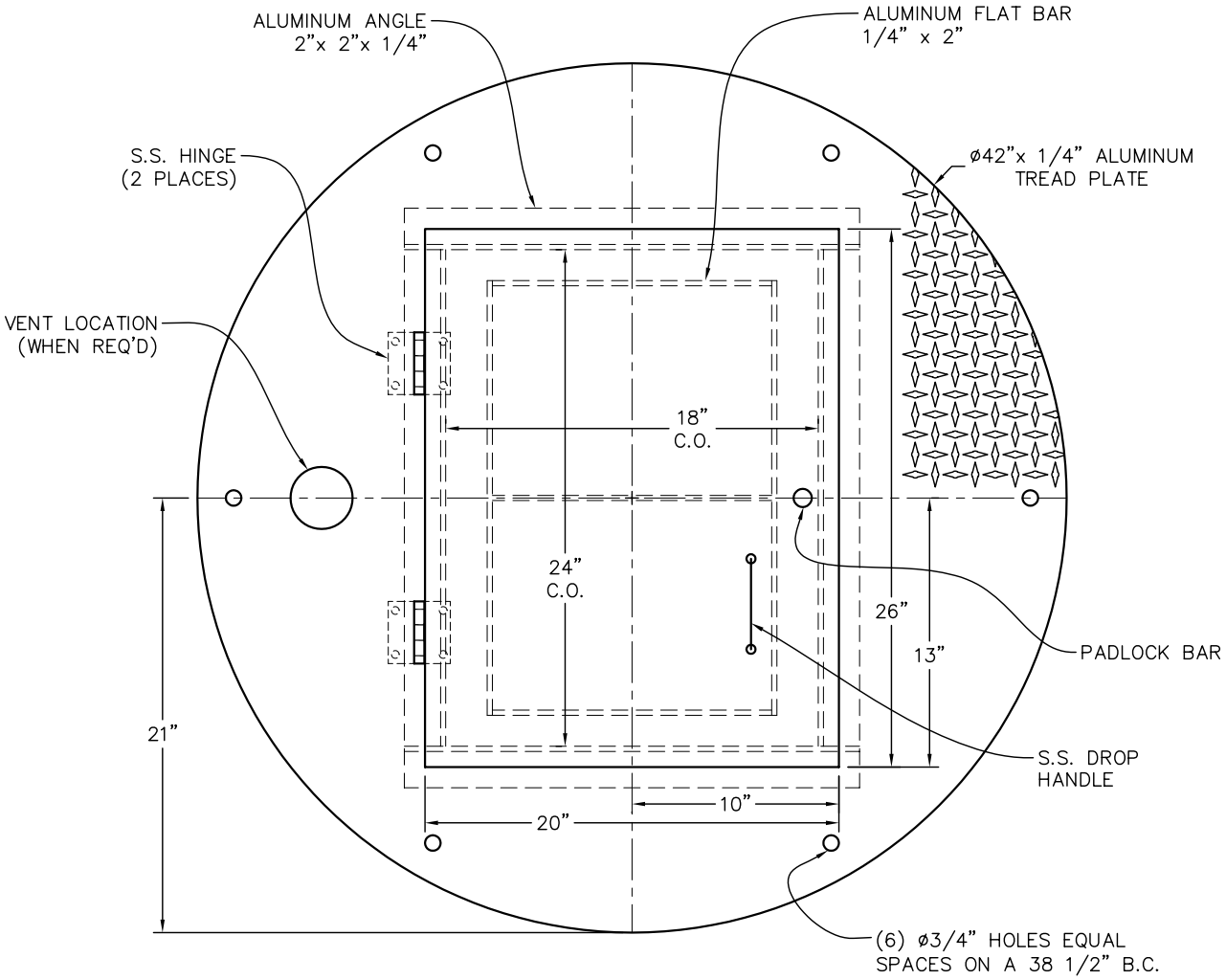

–300 PSF LOAD RATING

STEELE PLASTICS, INC.
P.O. Box 1076 / 1280 Sturgis Rd.
Conway, AR 72033
(501) 327–5122 Fax (501) 327–0807

TITLE 36" ALUMINUM SINGLE DOOR HATCH COVER	
PROJECT	JOB NO.
	P.O. NO.
CUSTOMER	DWG. NO. CVA36HTH

F:\A_CAD\SP WEBSITE\ALUM36SD.DWG, 5/12/2009 10:36:11 AM